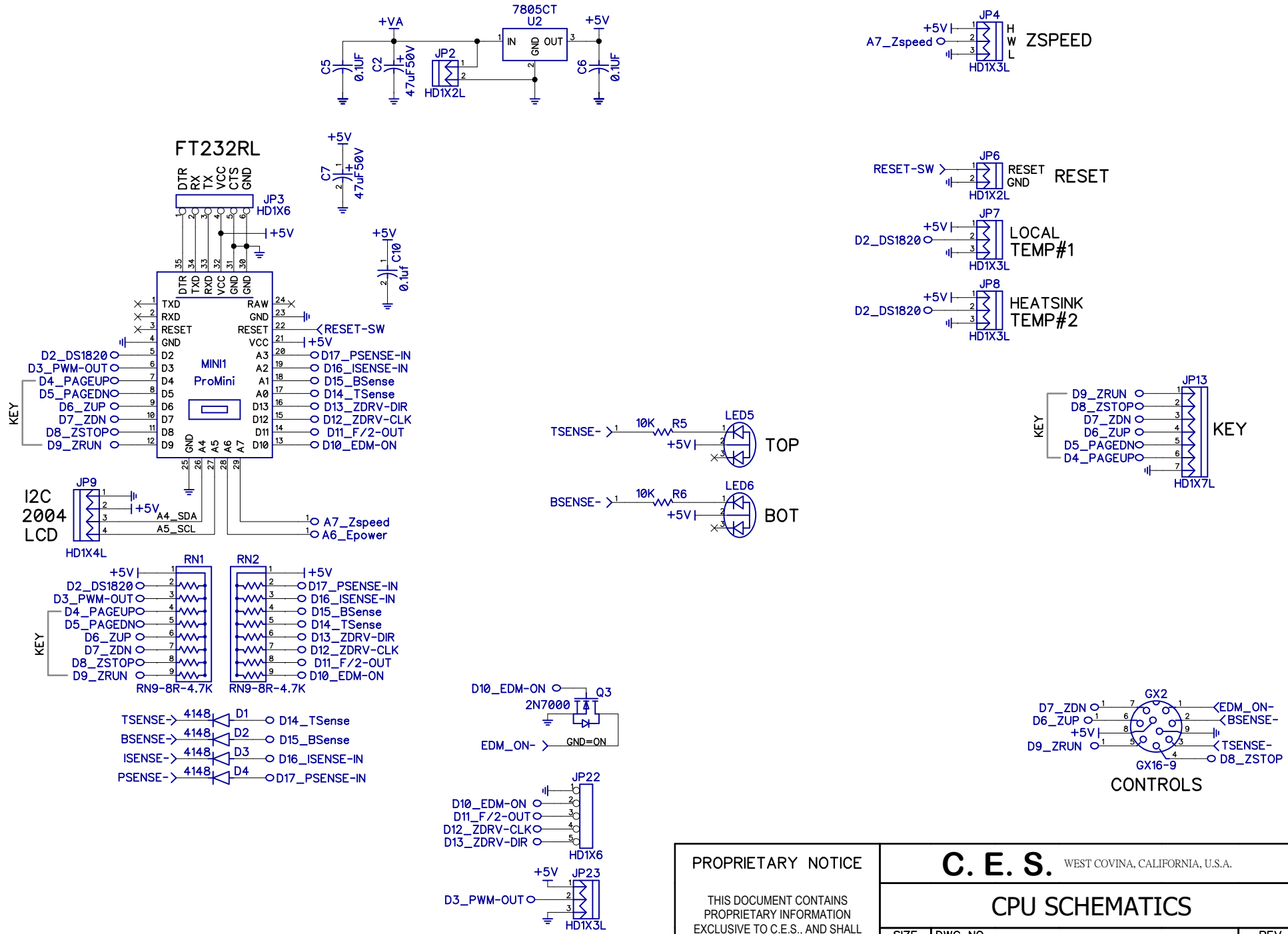

PROPRIETARY NOTICE

THIS DOCUMENT CONTAINS PROPRIETARY INFORMATION EXCLUSIVE TO C.E.S., AND SHALL NOT BE REPRODUCED, USED, OR DISCLOSED IN WHOLE OR IN PART TO OTHERS EXCEPT AS AUTHORIZED IN WRITING BY C.E.S..

C. E. S. WEST COVINA, CALIFORNIA, U.S.A.

CPU SCHEMATICS

SIZE	DWG NO.	REV
A	CES181005-3	01
	CES181005-3_v01.dch	Sheet 1 of x