REVISIONS					
ZONE	LTR	DESCRIPTION	DATE	BY	APPROVED

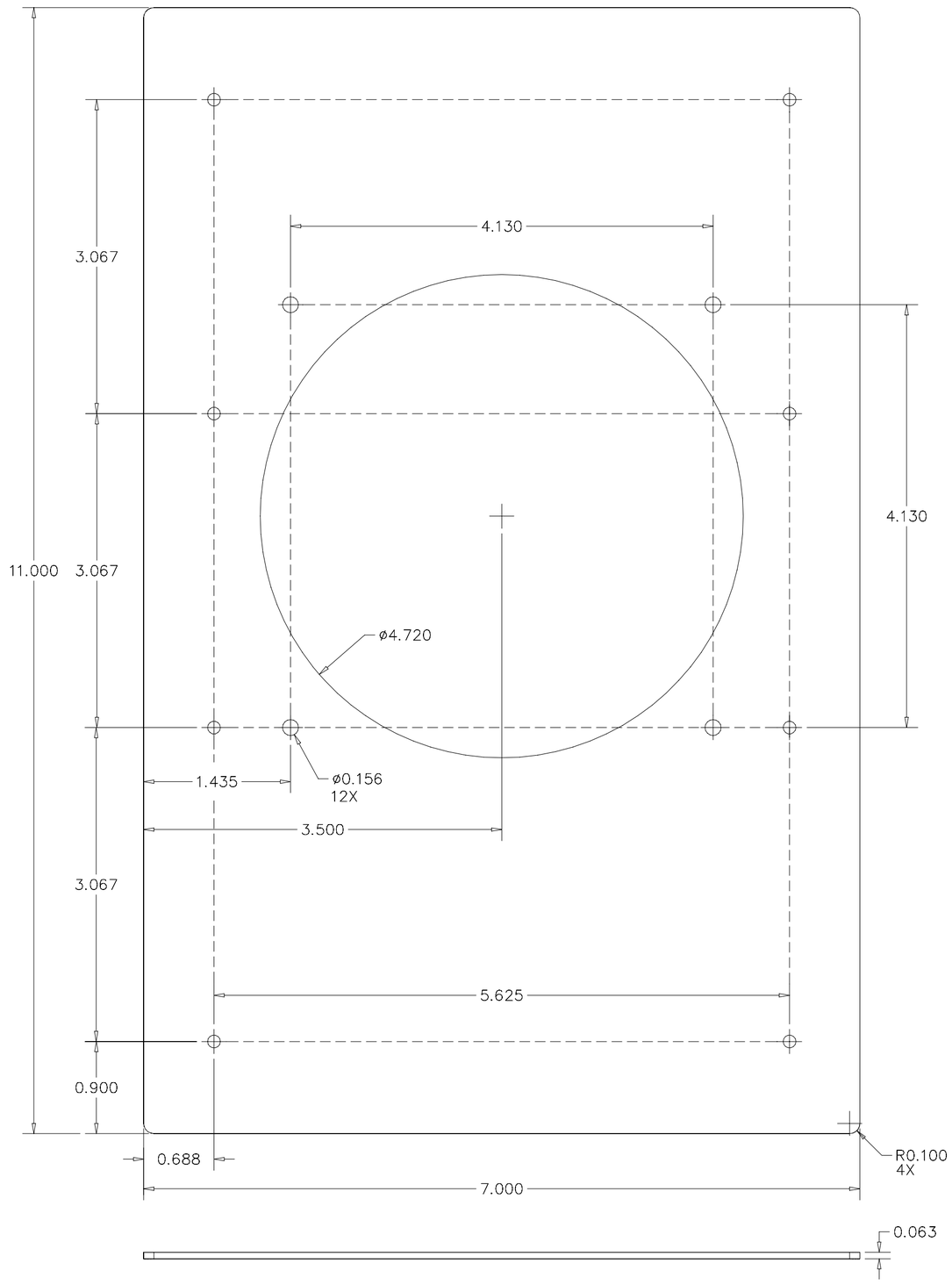

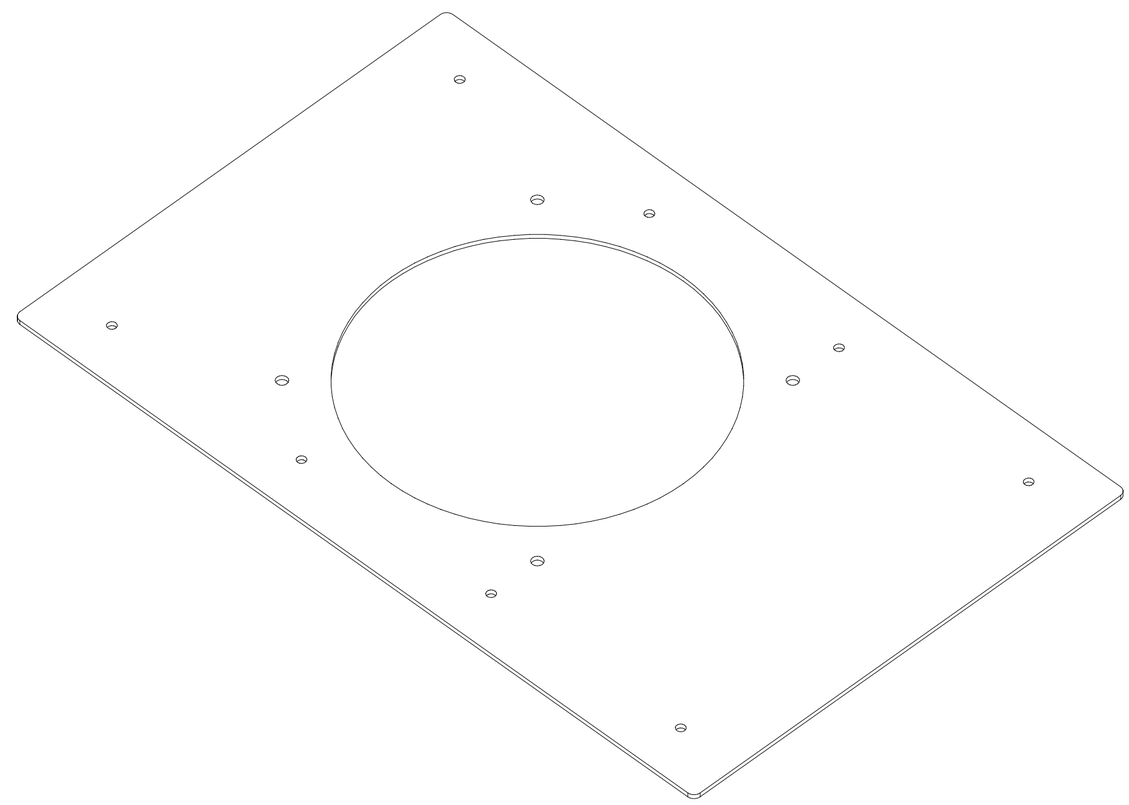

1. USED ON EMC4 B6 SERIES

NOTE:

NEXT ASS'Y	USED ON

THIS DOCUMENT CONTAINS PROPRIETARY INFORMATION EXCLUSIVE TO CES AND SHALL NOT BE USED, DUPLICATED, OR DISCLOSED IN WHOLE OR IN PART FOR MANUFACTURE, PROCUREMENT, OR OTHER PURPOSES EXCEPT AS AUTHORIZED IN WRITING BY CES.

UNLES OTHERWISE SPECIFIED
DIMENSION ARE IN INCHES
TOLERANCES:
.XX ±0.010
.XXX ±0.005
ANGULAR ± 0° 30'
REMOVE ALL BURRS
BREAK ALL SHARP EDGES

MATERIAL:
ALUMINUM
6061-T6

APPROVALS		DATE
DRAWN	LAWRENCE CHU	1/2/19
CHECKED		
DESIGNED	LAWRENCE CHU	6/13/18
APPROVED		

FINISH:

SIZE: C

CES Chu's Engineering Service
CALIFORNIA, U.S.A.

CASE TOP

SCALE NONE | SHEET 1 OF 1 | DWG NO. C4B6-C-T | REV. –

CAD DWG DO NOT SCALE

FILE: