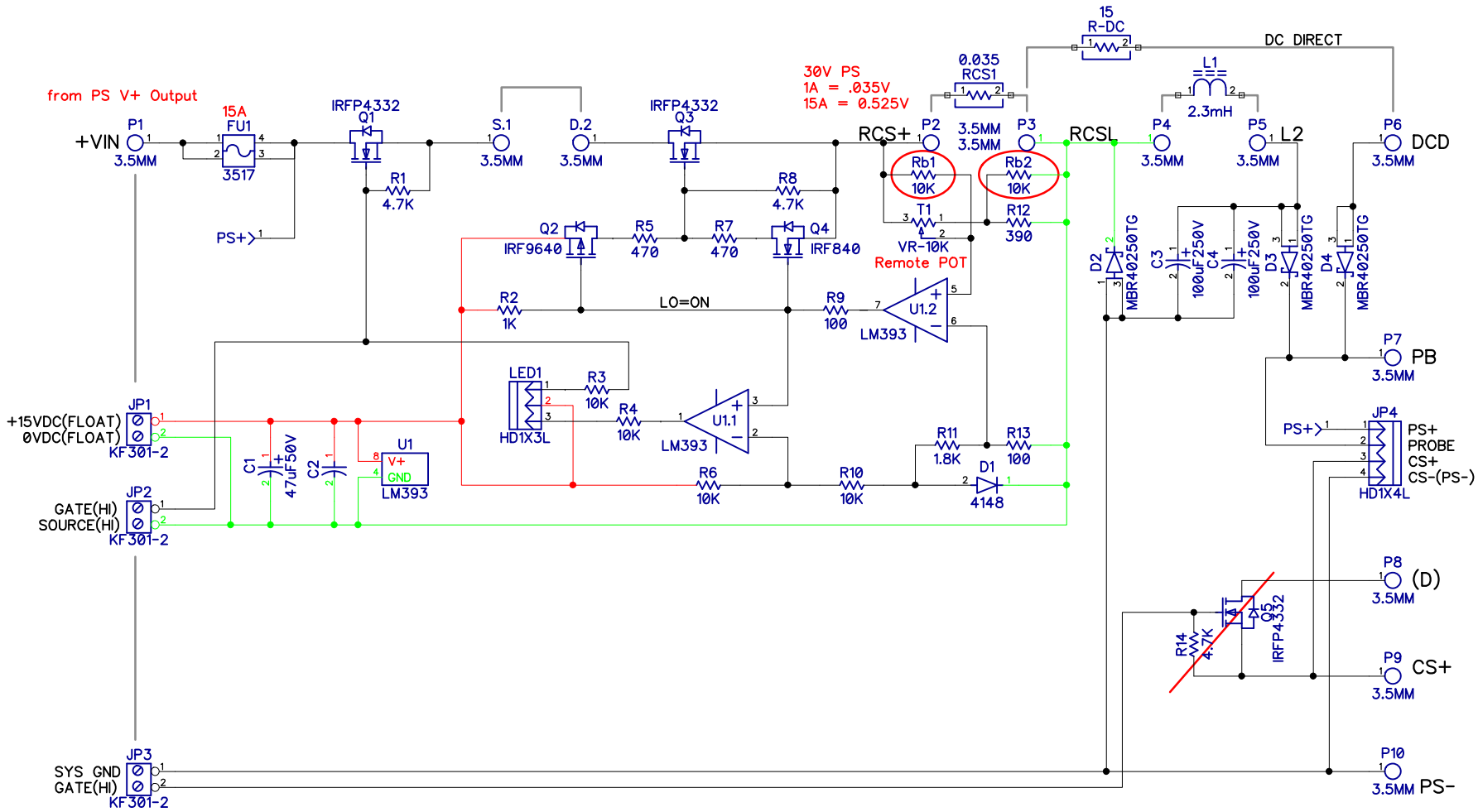

EDMP4 v01 as built

CES171114 CONFIG CKT

PROPRIETARY NOTICE

THIS DOCUMENT CONTAINS PROPRIETARY INFORMATION EXCLUSIVE TO C.E.S., AND SHALL NOT BE REPRODUCED, USED, OR DISCLOSED IN WHOLE OR IN PART TO OTHERS EXCEPT AS AUTHORIZED IN WRITING BY C.E.S..

C. E. S. WEST COVINA, CALIFORNIA, U.S.A.

DRIVER SCHEMATICS

SIZE	DWG NO.	REV
A	EDMDRV3	01b
	EDMDRV3_v01b.dch	Sheet 1 of x